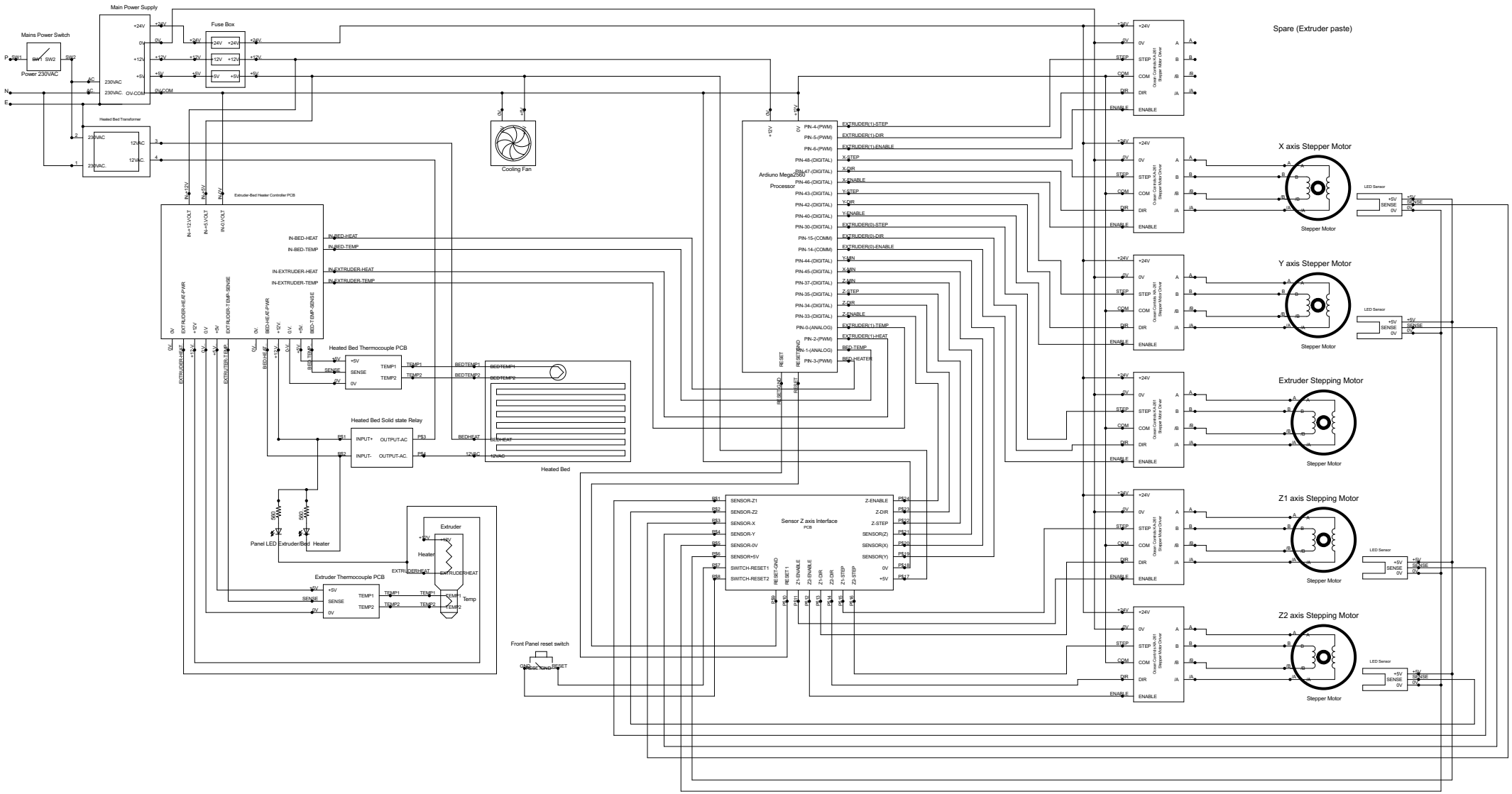

6/03/2011 1.44.12 p.m. f=0.41 C:\Documents and Settings\Bruce\My Documents\Bruce Projects\08 Reprap project\Mendal parts\Mendal M5 Battle Tank.sch (Sheet: 1/1)